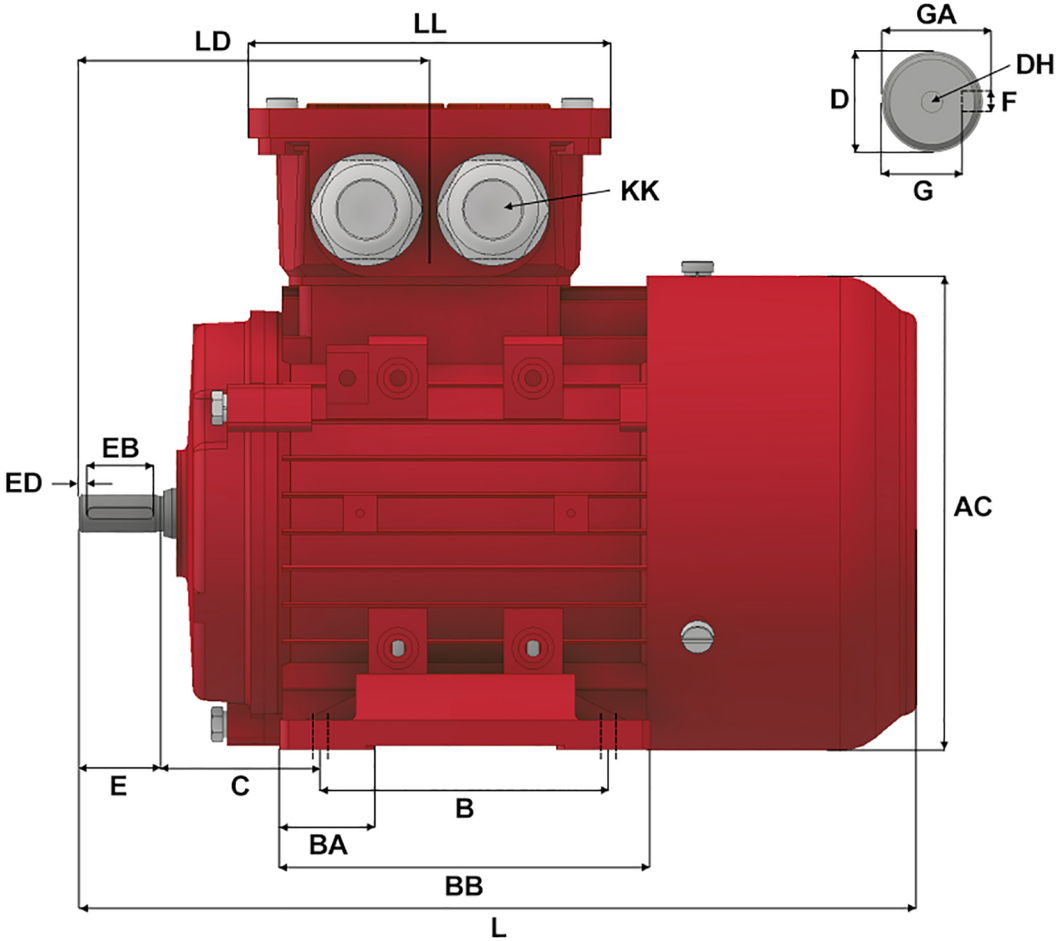

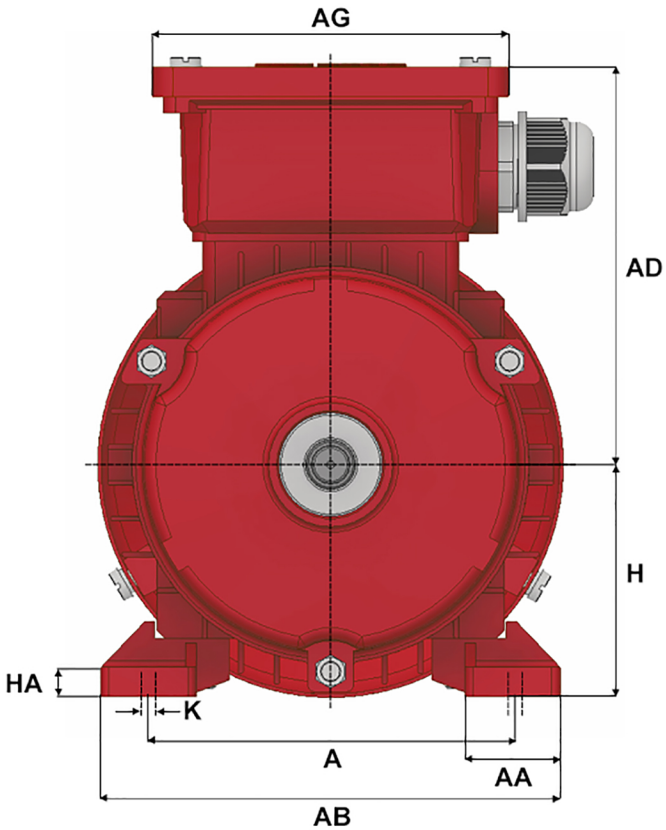

Version: 1JLEM	Revised: 15-02-2023	HP	RPM	FRAME	ENCLOSURE	IJA290S-6-B3
Customer is responsible in determining that Max Motion product will fit/perform suitably in the intended application		1	1200	90S	TEFC	

A	B	C	D	E	F	G	H	K	L	AA	AB	AC
140	100	56	24	50	8	20	90	10 X 14	315	37	173	165
AD	**AG**	**BA**	**BB**	**DH**	**EB**	**ED**	**GA**	**HA**	**KK (1)**	**KK (2)**	**KK (3)**	**LD**
138	109	32.5	125	M8 X 19	40	5	27	10	M20 X 1.5	3/4'' NPT	-	136
LL												
109												